校口 上机前敬请校对，上机后恕不负责！

重要通知 Important Notices

注意！该产品在经过严格的性能演示和实际测试，验证符合安全标准后分批生产。对任何遥控型号的使用，因零件使用破损异常，装配不当或在不安全环境下操作而造成的事故，制造商或经销商不承担任何责任，请务必在安全的环境下操作本产品。

Note! The products are manufactured by batches after performances have been strictly demonstrated ane practically tested to verify meeting safety standards.For any use of remote-controlled model,the manufacturer or dealer won't bear any responsibility for accidents resuilted from abnormal parts usage and wearing,impeoper assembling or operation under usafe environment.please be sure to operate this product under safe environment.

故障排除 Troubleshooting

产品的问题 Product Problem	解决的方法 The Solution
推土机无法启动 Tractor cannot start	1. 电源开关关闭，请打开。 1. The power switch is off, please turn it on. 2. 电池安装不正确，请检查电池正负极确保电池安装无误。 2. The battery is not installed correctly, please check the positive and negative poles of the battery to ensure that the battery is installed correctly. 3. 电池已耗尽，请给电池充电或更换新电池。 3. The battery is exhausted, please charge the battery or replace with a new battery.
遥控器无法使用 The remote control cannot be used	1. 遥控器电池已耗尽，请更换新电池。 1. The remote control battery is exhausted, please replace it with a new one. 2. 推土机不在遥控器控制范围，请保持在可操控的范围。 2. The Tractor is not in the control range of the remote control, please keep it in the controllable range. 3. 周边有电磁波干扰，请将玩具拿到宽敞的场地使用。 3. There is electromagnetic interference around, please take the toy to a spacious place for use.

注：周围的电磁波干扰可能造成遥控车故障，可重启遥控车再次进行操作。

Note: The surrounding electromagnetic wave interference may cause the Tractor to malfunction, you can restart the remote control car to operate again.

亿工玩具
YI GONG TOYS

履带式重型推土机
TRACK-TYPE TRACTOR

使用说明书
Instruction Manual

2.4 GHz

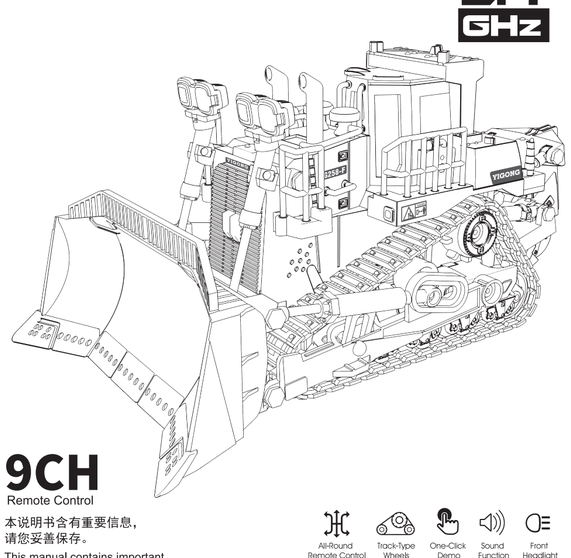

9CH
Remote Control

本说明书含有重要信息，请您妥善保存。

This manual contains important information,please keep it properly.

All-Round Remote Control 多通道操作 | Track-Type Wheels 履带式轮圈 | One-Click Demo 一键演示 | Sound Function 灯光功能 | Front Headlight 声音功能

前言 Preface

- 感谢您选购我们的产品，为确保正确的使用，请您详细阅读本说明书之后再操作，同时本说明书含有重要信息，请您妥善保存。
- Thank you for purchasing our product.Please read this manual carefully before use and retain it for future reference.

产品配置 Product Configuration

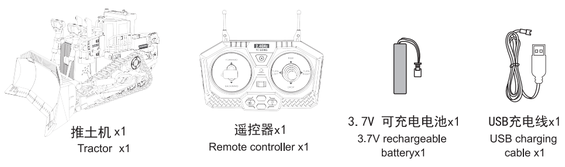

推土机部件名称 Major Parts Of The Tractor

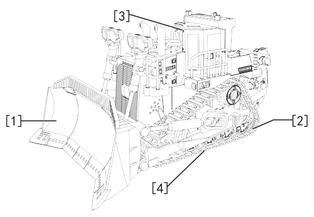

[1] 挖斗
[1] Tractor Bucket
[2] 履带式轮圈
[2] Track-Type Wheels
[3] 仿真操控台
[3] Simulation Control Deck
[4] 电池仓
[4] Battery compartment

电池安装和使用 Battery Installation And Use

1. 遥控器电池安装 Remote Control Battery Installation

将遥控器电池盖上的螺丝松开，按照遥控器指示的正负极，正确装入2节1.5V“AA”非充电电池（需另购），再重新盖上电池盖，拧紧螺丝。

Unscrew counter clockwise to open the battery compartment cover,install 2X1.5"AA" batteries (batteries not included) into the battery compartment accroding to the given polarity, screw clockwise to close the battery compartment.

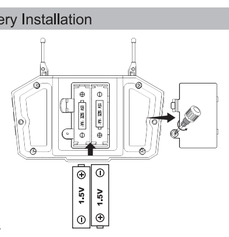

- 非充电电池不能充电；
- 充电电池只能在成人监护下充电；
- 充电电池在充电前应从玩具中取出；
- 如何取出和放入电池：用螺丝刀松开螺丝钉，揭开电池盖，按正确极性放入和取出电池；
- 取出和放入电池应按玩具电池室上的标识进行；
- 只能使用与推荐电池一样或相同的电池；
- 不可混用新旧或不同类型的电池；
- 电池应以正确的极性放入；
- 用尽的电池应从玩具中取出，若长期不使用，请将玩具中电池取出；
- 电源端子不得短路；
- 不能连接多于推荐数量的电源上；
- USB充电线连接必须请由家长完成；
- 本产品只能使用配送的USB充电线进行充电，不得使用不被推荐的USB充电线，USB充电线不是玩具；
- USB充电线必须定期检查其电线、插头、外壳和其他部件是否损坏，发现损坏时应停止使用，直至修复完好。

- Toys use battery type: Tractor uses 1X3.7V rechargeable battery; remote control uses 2X1.5V "AA" non-rechargeable batteries (batteries not included);
- Non rechargeable batteries are not to be charged;
- Rechargeable batteries can only be charged under adult supervision;
- Rechargeable batteries are to be removed from the toys before being charged;
- Take out and put in the battery according to the label on the toy battery room;
- Only batteries of the same or equivalent type as recommended are to be used;
- Don't mix old and new batteries;
- Don't mix alkaline,standard (carbon zinc),or rechargeable (nickel cadmium)batteries;
- Exhausted batteries are to be removed from the toy. If it is not used for a long time, please take out the battery in the toy;
- The supply terminals are not to be short-cirui ted;
- This product can only be charged with the delivered USB charging cable, and it is not allowed to use USB charging cable that are not recommended. USB charging cable is not toys;
- The USB charging cable to be used with the product should be regularly examined for potential hazard,such as damage to the cable or coed,plug,enclosure of other parts and that in the event of such damage ,the peoduct must not be used until that damage had been properly removed.

安全注意事项 Flight Safety Guidelines

- 本产品含有小零件，请将其置于小孩不能触及的地方，以免发生误食或窒息危险，禁止3岁以下儿童使用。
- Keep the small accessories away from kids to avoid accident,not suitable for children under 3 years.

2. 推土机电池安装 Tractor Battery Installation

确保电源开关处于OFF位置，将推土机电池盖上螺丝松开，取下电池仓盖。将3. 7V充电电池的电源接头插入推土机电池仓的电源接口处，再重新盖上电池盖，拧紧螺丝。

Making sure that the power swich is in the OFF position, remove the screw form the battery cover and remove the battery compartment cover.Insert the power connector of the 3.7V rechargeable battery into the power connector of the tractor battery compartment,screw clockwise to close the battery compartment.

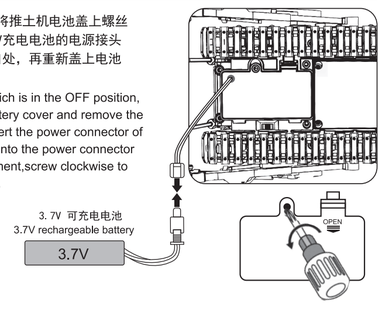

WARNING: 警 告
长时间不使用推土机时，请取下电池。
Remove the battery if the tractor is not going to be used for a long time

3. 推土机电池充电 Tractor Battery Charging

将电池的电源接头插入USB充电线，再将USB充电线连接至适配器或者电脑上的USB接口。电池充电时. 红灯常亮，充满电时，红灯熄灭。电池充满电时间约3-4小时。

Insert the power connector of the battery into the USB charging cable, and then connect the USB charging cable to the adapter or the USB port on the computer.When charging is peooeeding,the red light keeps solid on,when charging is finished, the red light is off.The charging time is about 3-4 hours.

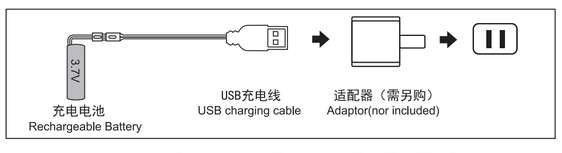

- 充电前请先检查适配器输入电压与当前使用电压是否一致；
- 适配器输出电压与电池电压要一致。
- 充电时，必须在成人监护下进行。
- 充电时必须远离易燃物，充电时要有成年人在一旁看管。

- Please check whether the adapter input voltage is consistent with the current voltage before charging;

- 请勿在公共道路等危险的地方玩耍，选择安全的地方操作，避免危险。
- Don't play in dangerous places such as public roads,select a safe place for operating to avoid dangerous.
- 请勿在桌子或柜台等高架处使用本产品，避免高空坠落或重摔。
- Don't use this product on elevated places such as tables or counters, and avoid falling or heavy falls.
- 请勿将本产品放置在阳光直射或暖气设备等温度过高的地方，避免因高温引起变形，甚至损坏。
- Don't place this product in direct sunlight or high temperature places to avoid deformation or even damage caused by sun exposure and high temperature.
- 不要在雨天或者水（泥）坑上玩耍。防止被水弄湿，以免引起故障，若不慎弄湿，请用吸水性佳的布将水吸干。
- Don't play on rainy days or water (mud) pits. Prevent being wetted by water, so as not to cause malfunction, if you accidentally get wet, please use a cloth with good water absorption to absorb the water.
- 玩耍时注意不要让手指、头发、衣服等碰到轮子，以免受伤。
- Be careful not to touch the wheels with fingers, hair, clothes, etc., to avoid injury.
- 当遥控车或遥控器电池电量不足时，遥控车速度会明显减慢，请更换电池或及时充电。
- When the battery of the r/c car or the remote control is low, the speed of the remote control car will slow down significantly. Please replace the battery or charge it in time.
- 请勿用手暴力掰动推土机的挖斗，避免损坏推土机。
- Please do not violently move the tractor bucket by hand to avoid damage to the tractor.
- 请勿破坏遥控天线，以免造成损坏。
- Don't break the remote control antenna to prevent injury.
- 维修保养：用干抹布擦拭表面污迹。
- Maintenance: wipe the surface stains with a dry cloth.

注意 NOTE

本款产品的挖斗等容易损坏与脱落，如零件损坏或丢失，可向制造商或经销商购买同型号的零件，自行进行更换安装，确保产品的结构完整。
请勿使用不同型号或不同品牌的零件进行安装，以确保产品的结构安全。

The bucket of this product are easy to damage and fall off. If the parts are damaged or lost, you can purchase the same model parts from the manufacturer or dealer, and replace and install them yourself to ensure the complete structure of the product. Do not use parts of different models or different brands for installation to ensure the structural safety of the product.

- The output voltage of the adapter should be consistent with the battery voltage;
- When charging, it must be done under adult supervision;
- Keep away from flammable materials when charging, and have an adult watch over when charging.

操作演示 Operation Demonstration

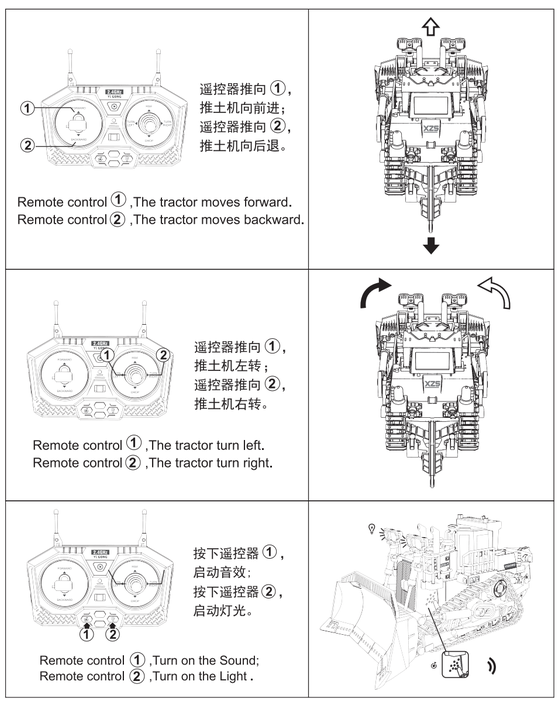

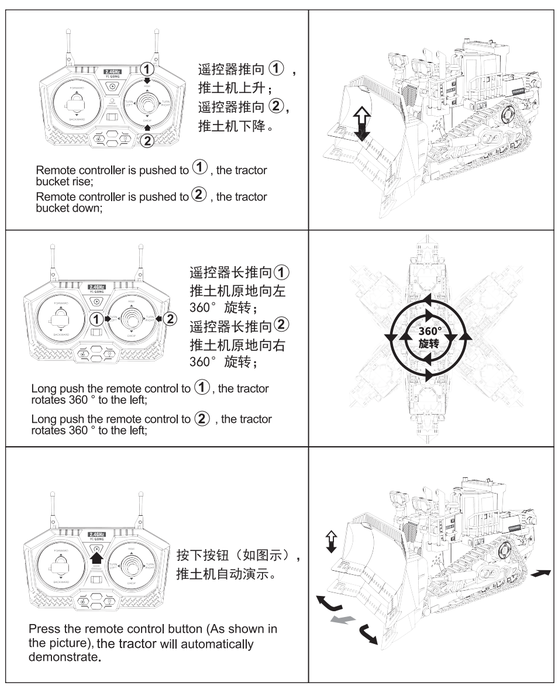

使用完本产品，请用干抹布擦拭表面污迹，避免部件损坏，延长产品使用寿命。
After using the product, please wipe the surface stains with a dry cloth to avoid damage to the components and prolong the service life of the product.

电池注意事项 Battery Precautions

- 玩具使用电池类型：推土机使用1节3. 7V可充电电池；遥控器使用2节1. 5V“AA”非充电电池(需另购）；

(亿工)9通遥控推土车（NO. BC1039/1040）拼版单色 K 2022/4/9 校口 校口 (亿工)9通遥控推土车（NO. BC1039/1040）拼版单色 K 2022/4/9
上机前敬请校对，上机后恕不负责！ 校口